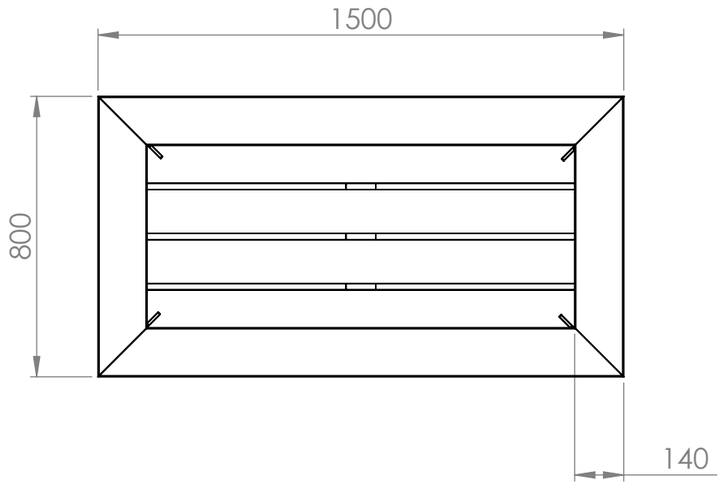

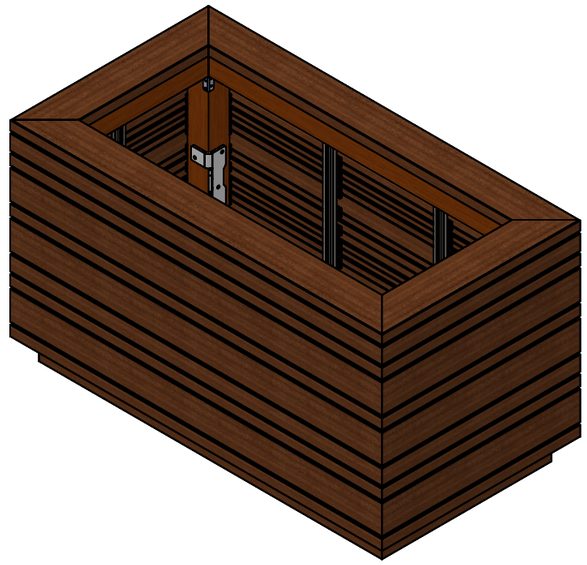

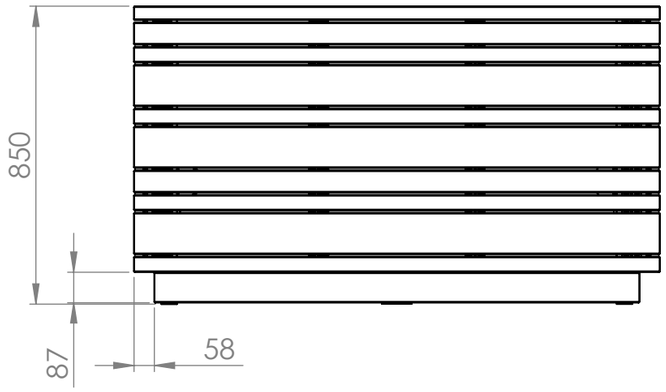

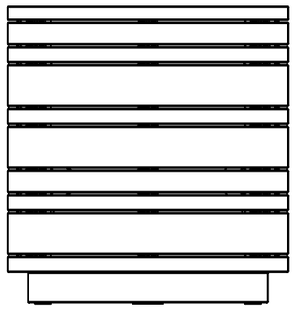

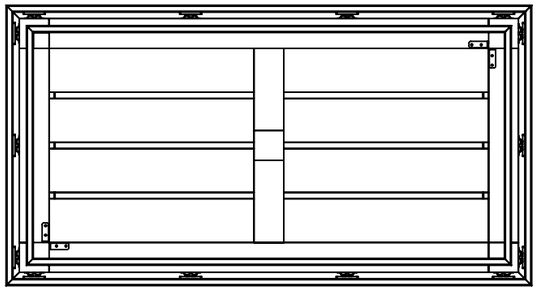

		DATE
DRAWN	Pleuni Bongers	10-1-2023
REVISION	Dorus Bannenberg	7-7-2023

ADEZZ®
WE PRODUCE GARDEN PRODUCTS FOR PROFESSIONALS

Liessentstraat 4, 5405 AG Uden (NL).
t 0031 (0)413 - 27 41 68.
e info@adezz.com, i www.adezz.com

TITLE:

BB24.1

Drawing.

BB24.1

A3

Color:

Mass (kg):

SCALE:1:17.5

SHEET 1 OF 21